Data Sheet

HUBER+SUHNER

EMP Protector
3400.17.0380

Description

Quarter-wave stub technology

Benefits

Broad-band design
The protector can also be installed reversely
Compliant to IEC 61643-21

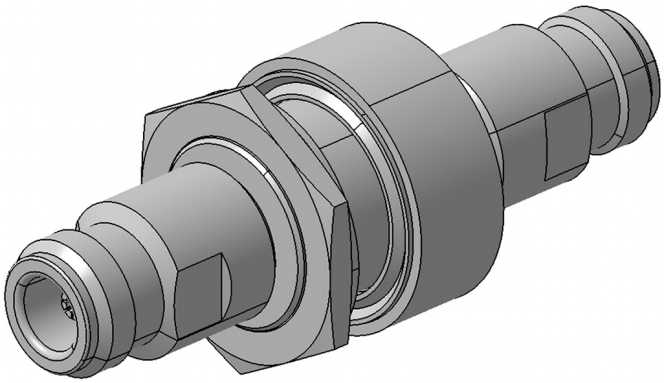

Product Configuration

Main path connectors	Port 1: unprotected, N jack (female) - Port 2: protected, N jack (female)
Mounting and grounding	MH69 (bulkhead mounting), brk (bracket)
Side of bulkhead	protected side

Technical Data

Electrical Data

Impedance	50 Ω
Frequency range	6000 - 18000 MHz
Return loss	≥ 20 dB
Insertion loss	≤ 0.3 dB
RF CW power	≤ 100 W
PIM 3rd order	not specified
Surge current handling capability	50 multiple kA (test pulse 8/20 µs)
Residual pulse energy	5 µJ typically (test pulse 4 kV 1.2/50 µs / 2 kA 8/20 µs) main path - protected side

Mechanical Data

Number of matings	500
Weight	225 g

Environmental Data

Operating temperature	-40 °C to +85 °C
Waterproof degree	IP65 (according to IEC 60529, data refer to the coupled state)
2011/65/EU (RoHS - including 2015/863 and 2017/2102)	compliant

Material Data

Piece Parts	Material	Surface Plating
Housing	Brass	SUCOPLATE (R) Plating
Port 1 center contact	Copper Beryllium Alloy	Gold Plating (without Nickel underplating)
Port 2 center contact	Copper Beryllium Alloy	Gold Plating (without Nickel underplating)

Related Documents

Outline drawing	DOU-00003513
Mounting instruction	DOC-0000176104

HUBER+SUHNER is certified according to ISO 9001, ISO 14001, AS/EN9100, ISO/TS 16949 and IRIS. www.hubersuhner.com

Waiver: Fact and figures herein are for information only and do not represent any warranty of any kind.